ConCribe

Shear resistance test
Flashjoint
95 mm

ConCribe

Reference	kf20210413
Project name	**SHEAR TEST FLASH JOINT 95 MM**
Date	2020.03.24
Contact	**TOFTEGAARD BYG**
Designed by	ABO
Verified by	AFO
Customer name	**TOFTEGAARD BYG / FLASH JOINT**

Scope

The purpose of the test is to document the shear resistance of flashjoint 100 mm in a concrete joint in a 100 mm thick concrete beam.

The test is designed as beams of 400 mm length and 100 mm width, with thickness 150 mm to be tested according to EN 12504-3 for pull off resistance.

The beams are produced at a precast plant using C20/25 concrete to demonstrate the lowest possible performance at low concrete grade. Concrete is certified to EN 206.

ConCribe

Drawings

Flashjoint profile

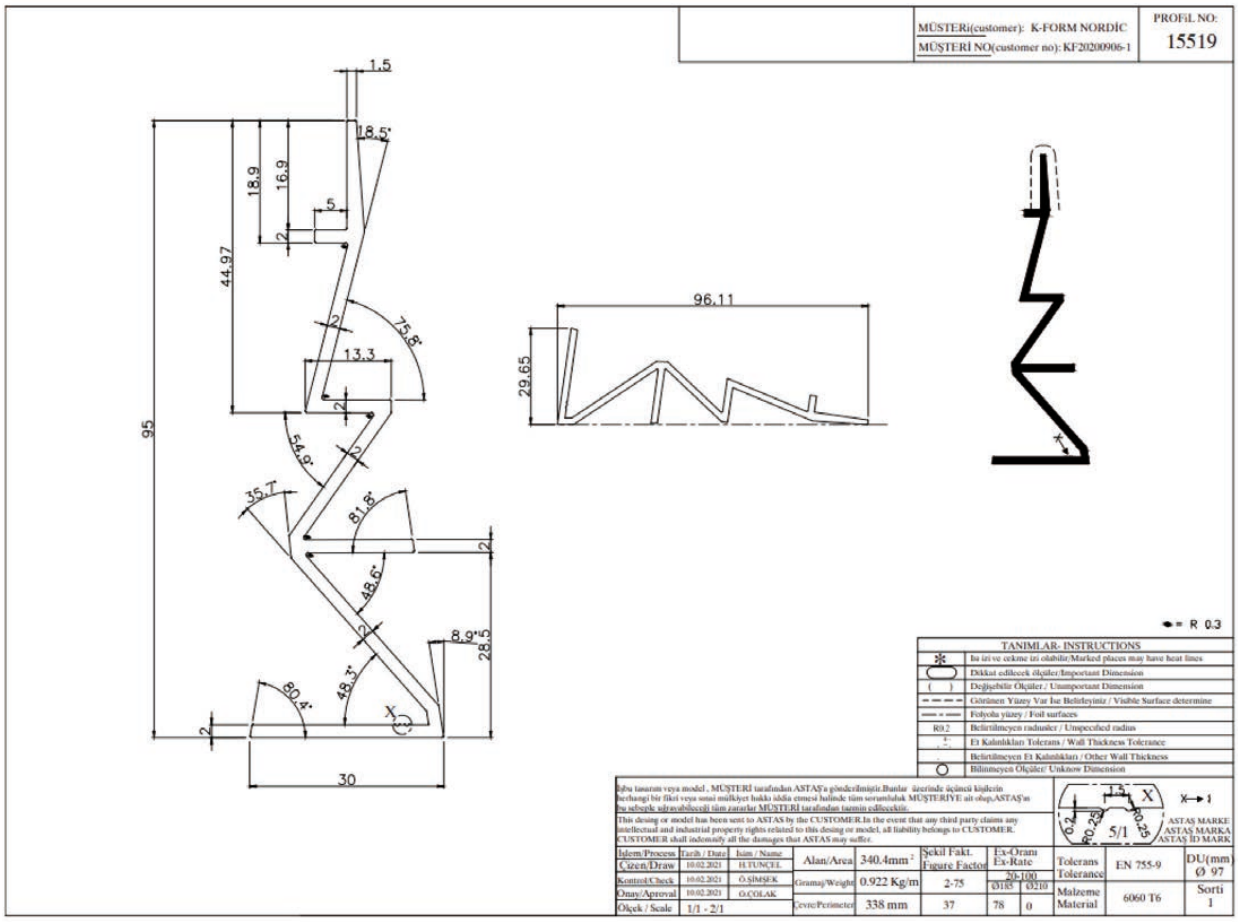

The flashjoints to be poured at the center of the test beams per the following drawing:

ConCribe

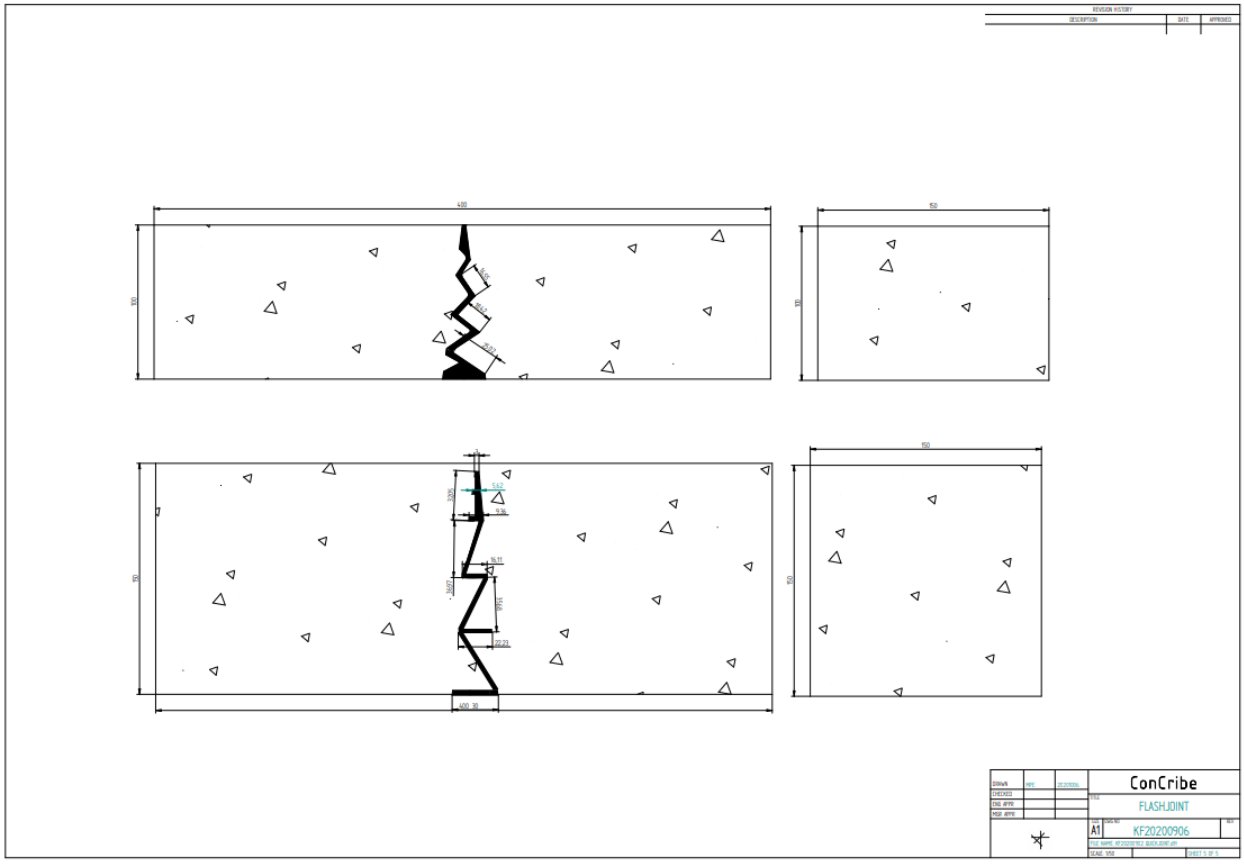

Design of the test beams and location of the flashjoint 100 and 150.

NOTE: THICKNESS OF THE CONCRETE BEAMS IS 100 MM INSTEAD OF 150 MM

ConCribe

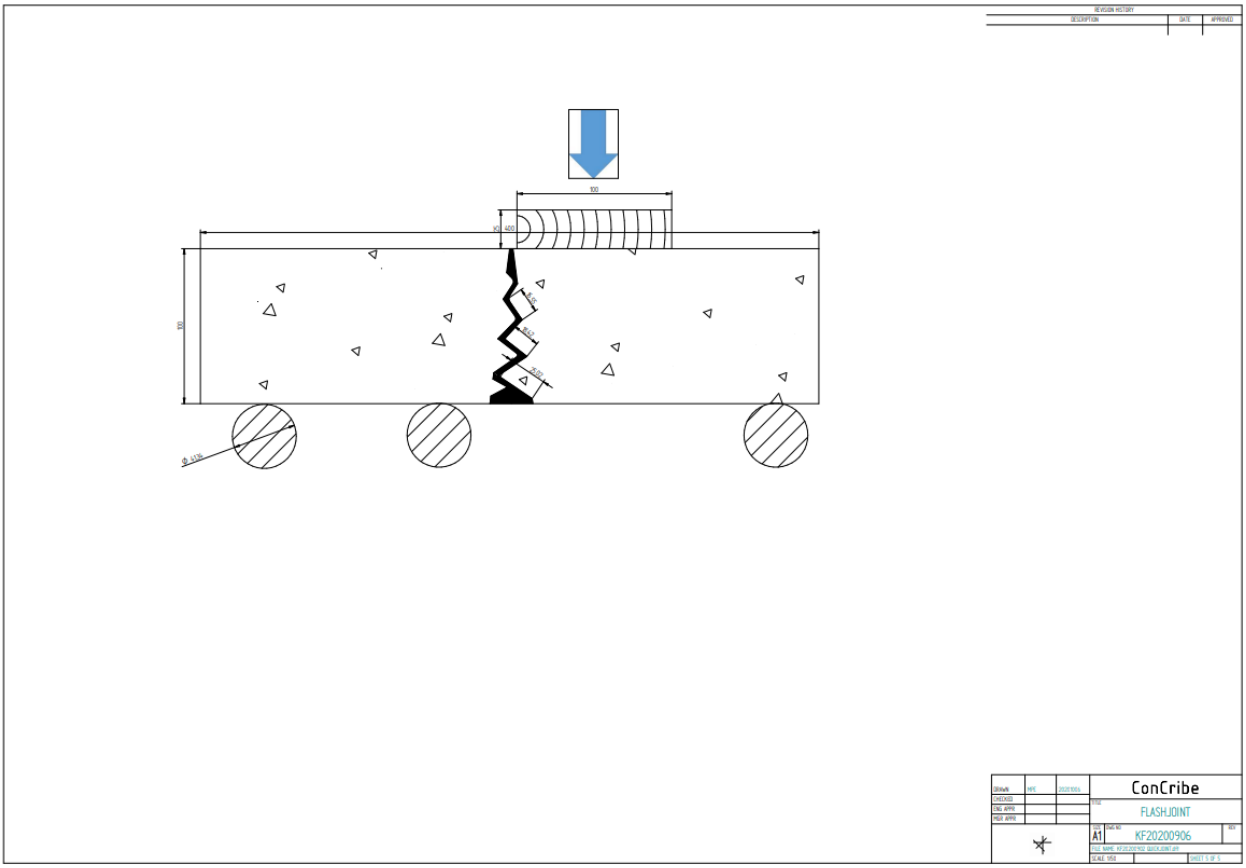

Test set up

Each beam is placed one at a time on the test bench against the above test sketch. One part of the beam across the flashjoint is fully supported along its length so movement in y direction is restrained entirely. The other part is only supported at end so it's free to move in y direction when pressure on this part close to the joint increases.

ConCribe

Test equipment

20 tons bench with hydraulic indicator

The bench is certified to :

Directive/Regulation	Harmonised standard
2006/42/EC	EN 1494:2000+A1:2008 EN ISO 12100:2010 EN ISO 13857:2008 EN 349:1993+A1:2008

ConCribe

Test set up

Beams

The beams were poured on 24-03-21, 27-03-21 and 28-03-21
They were demolded at 12 hours and stocked into 20 degrees hot water for 20 days.
Test was performed on 13-04-2021

Test report

FJ100 24-3-21

Collapse at 1.5 tons

ConCribe

FJ100 27-03-21

First crack at 1 tons
Collapse at 2 tons

ConCribe

FJ100 28-3-21

Collapse at 1 ton

ConCribe

Test conclusions

Ø	Diameter of the cylinder	45 mm
A	Area cylinder	1590 mm2
Ac	concrete section area	15000 mm2 (100 x 150 mm)
Po	Pressure at first crack	
P1	Pressure at collapse	
Fo	Force at first crack Mpa	
F1	Force at collapse Mpa	
Ro	Shear resistance Mpa	
R1	Shear resistance Mpa	
Rs	Shear resistance at SLS of FJ 100 per meter	
Ru	Shear resistance at ULS of FJ 100 per meter	
Vc	shear capacity concrete	Vc=0.34 Mpa for 30 Mpa concrete.

FJ 150	Po t	P1 t	Fo Mpa	F1 Mpa	Ro Mpa	R1 Mpa	Rs	Ru
24-mars	0	1,5		0,62		0,28		
27-mars	1	2	0,62	1,23	0,28	0,89	41,5 kN/m	133,9 kN/m
28-mars	0	1		1,54		1,2		180,1 kN/m
Average	**0,33**						**41,5 kN/m**	

Test expectations

Flashjoint	LTE
95	100 % up to 41 kN/m

ConCribe

Model without FJ

Thickness	100 mm	
Subgrade	5 N/cm3*	*min. value
HGV	25 t – wheel load 10 kN unfactored **	** assumed

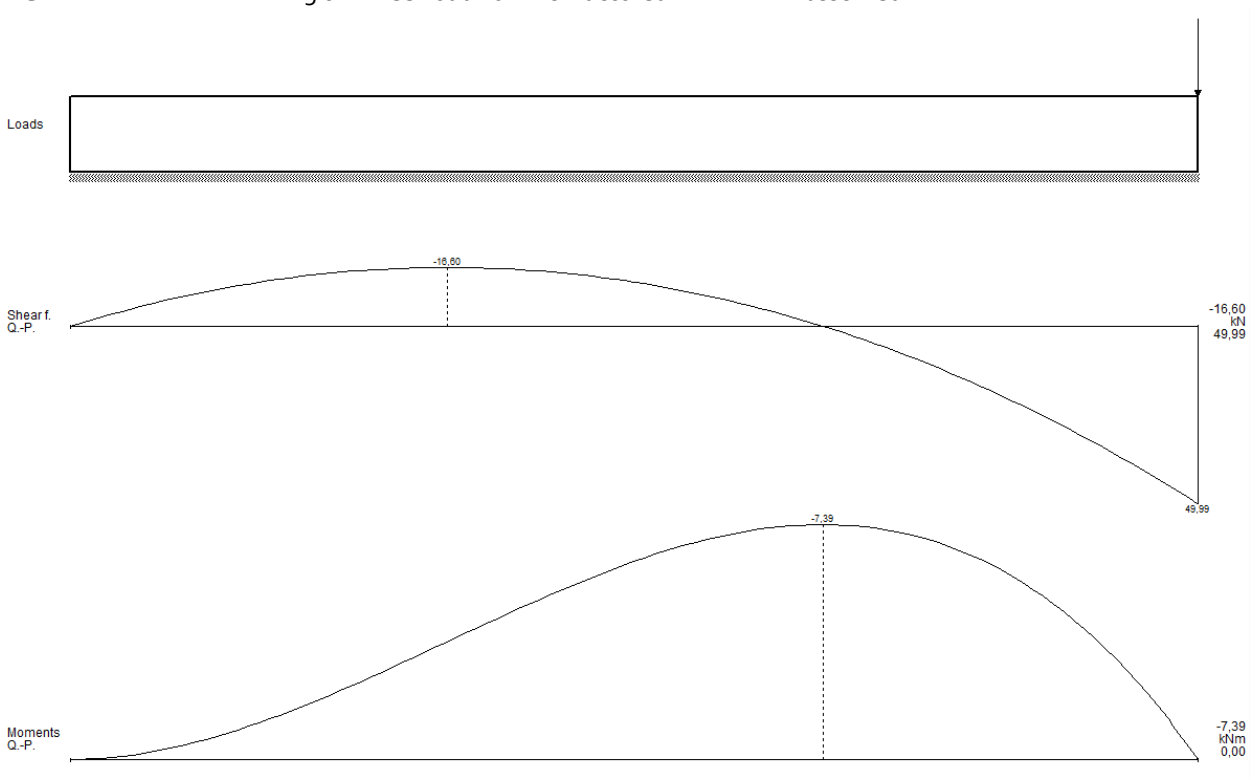

Shear force in the joint : 50 kN/m

ConCribe

Model with FJ

Thickness	100 mm	
Subgrade	5 N/cm3*	*min. value
HGV	25 t – wheel load 10 kN unfactored **	** assumed
Elastic support (FJ)	41 kN/m	

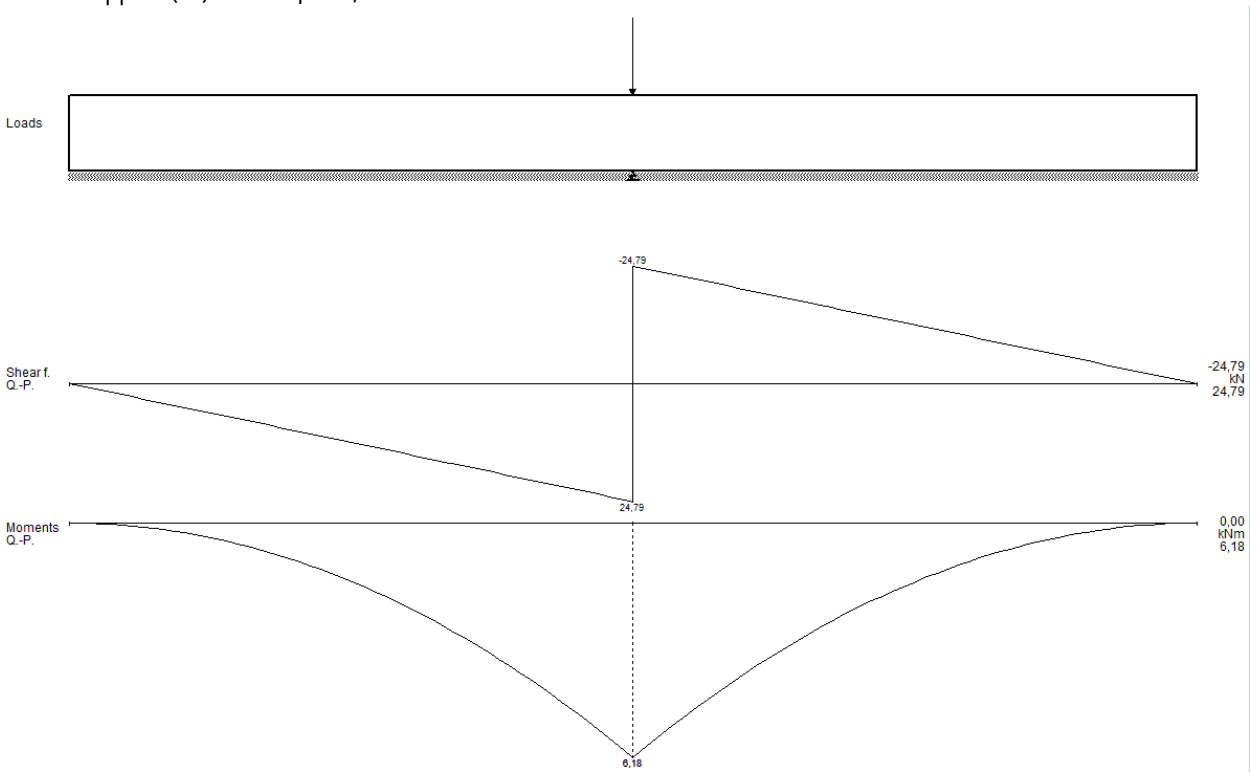

Conclusion model

FJ 150	Without FJ kN/m	With FJ kN/m	Value of shear resistance FJ
Shear	50 kN/m	24.8	25.2 kN/m

Test conclusion

The tested shear resistance of Flashjoint 100 has shown **41 kN/m at SLS**. It is to be noted that the beam was NOT supported as it was calculated to be in the expected test calculation.

The modelled test resistance has shown **25.2 kN/m** for a 25 t HGV on 4 axles at SLS.

Since CS TR34 does consider the use of dowels to reduce load transfer by 30 %, the use of FlashJoint is indeed a valid alternative to dowels and bars, as it conservatively reduces load transfer with **49%.**

Test was performed with plain concrete, FRC would improve results in any case.